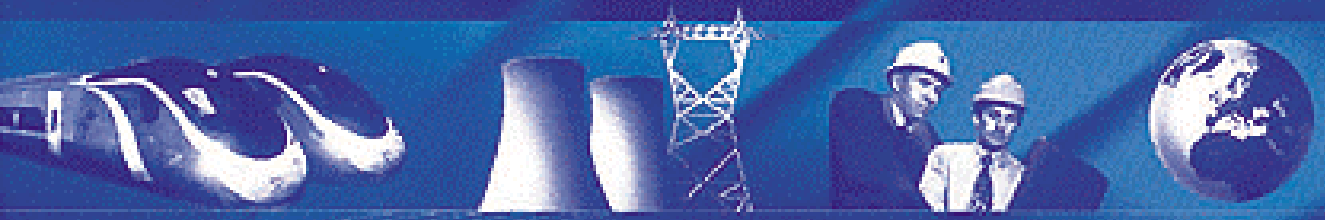

March 2003

Amtrak ACSES - RSAC update

Larry Light & Jim Hoelscher

ALSTOM

Review

ACSES = Advanced Civil Speed Enforcement System

- Utilizes passive transponders mounted between the rails
  - Transponders describe the civil or track speed requirements for both directions of travel
- Onboard system utilizes a transponder reader, an on board computer (OBC) and Aspect Display Unit (ADU)
  - The onboard system reads and decodes the transponder messages and develops a speed distance profile based on the data received.
  - The current civil speed limit is displayed by the ADU and enforced by the OBC
- The 9 and 4 Aspect cab signal systems used on the NEC operate independently of ACSES. ACSES operates as an overlay system.

PSR - Basic Operation example

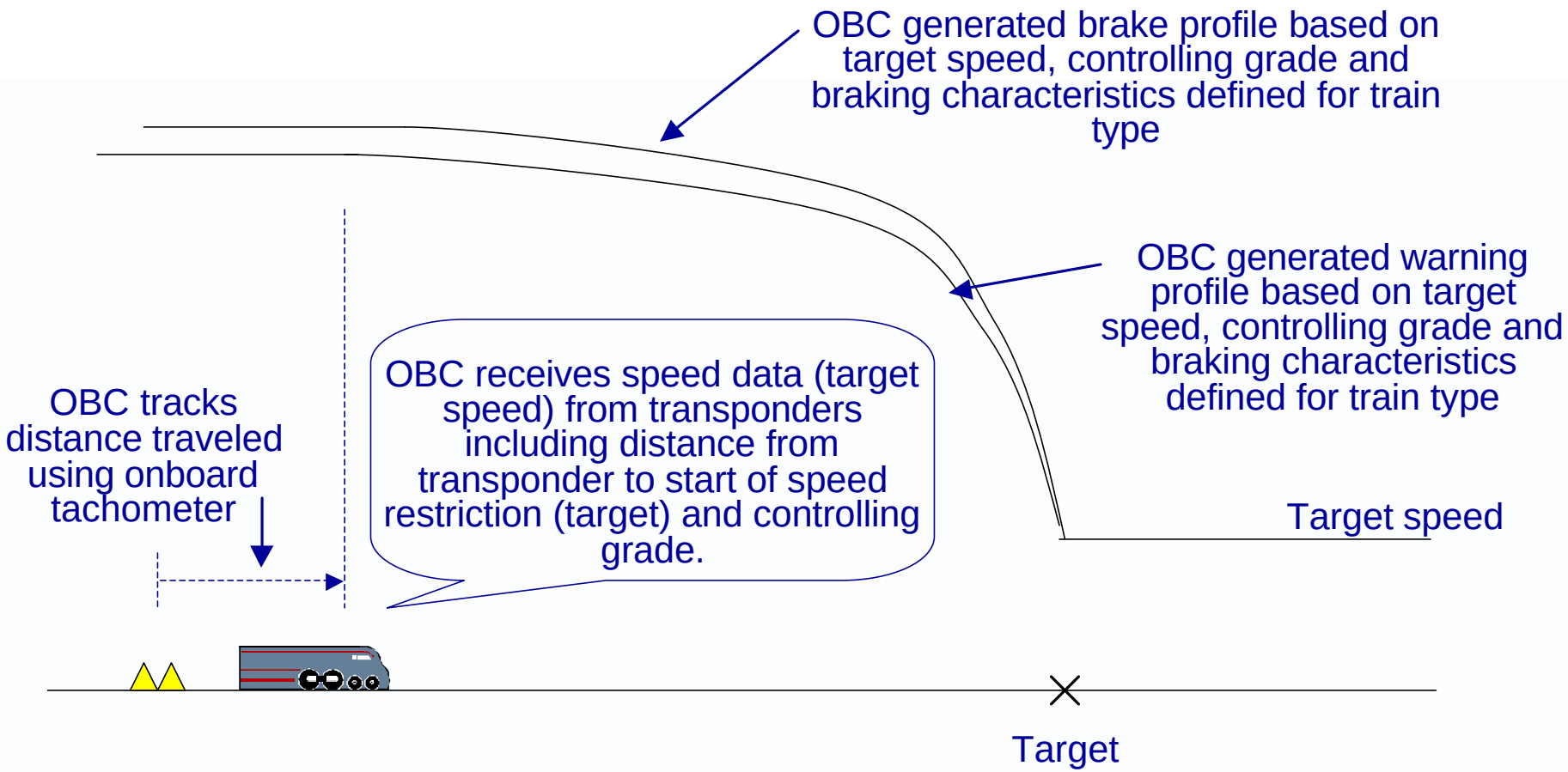

PTS - Basic Operation example

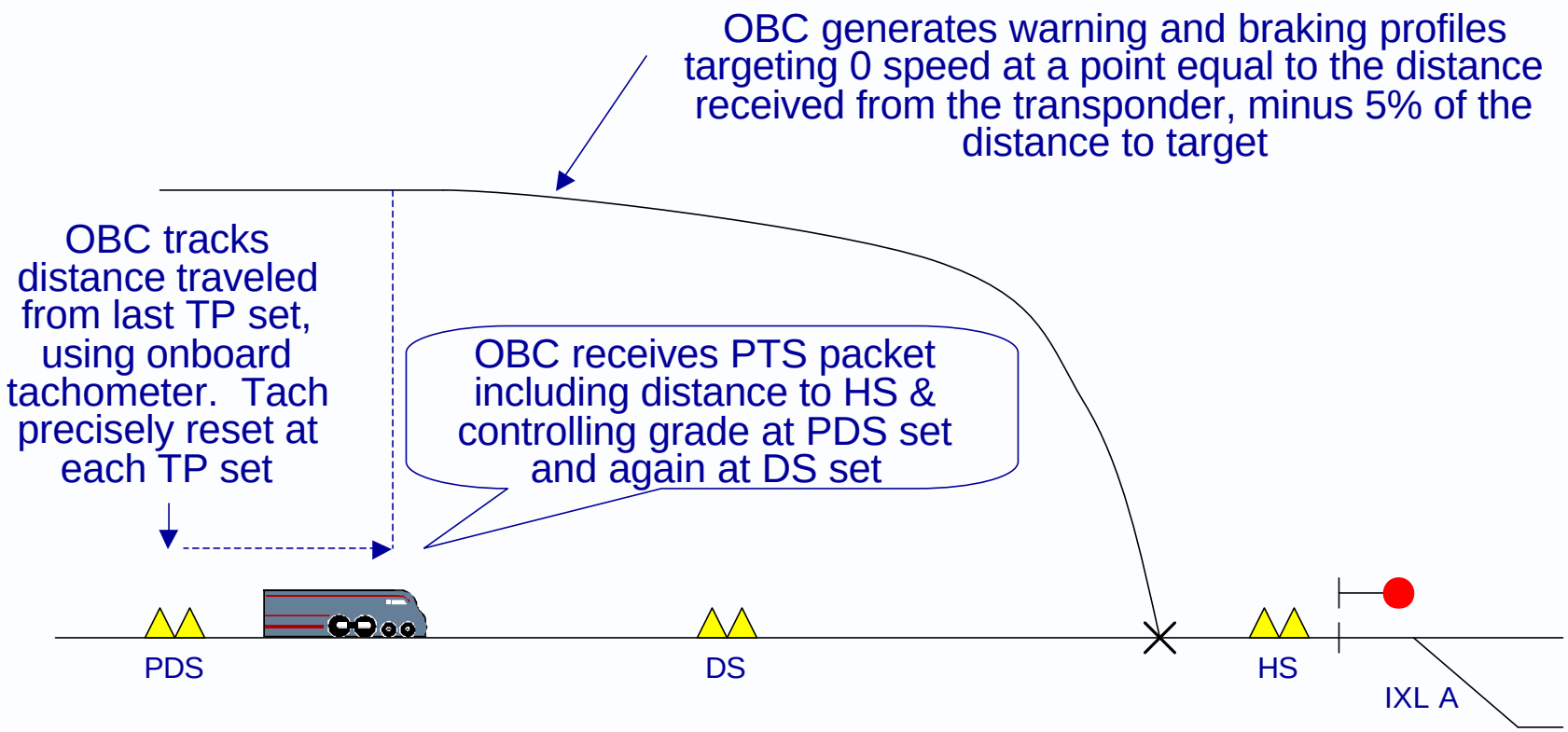

Status

- PSR/PTS Enforcement system in operation
- Next Phase
  - Provide radio release of PTS (PTSO)
    - Hardware Testing Complete
    - Software Testing Started
    - Prototype field test complete Feb. 28
    - Final field test and commissioning planned for this summer

PTSO - Basic Operation example

ACSES PTS operation - If cab signal is more favorable than restricting ACSES request for PTS is automatically over ridden by Cab system. If cab system is cutout ACSES enforces PTS.

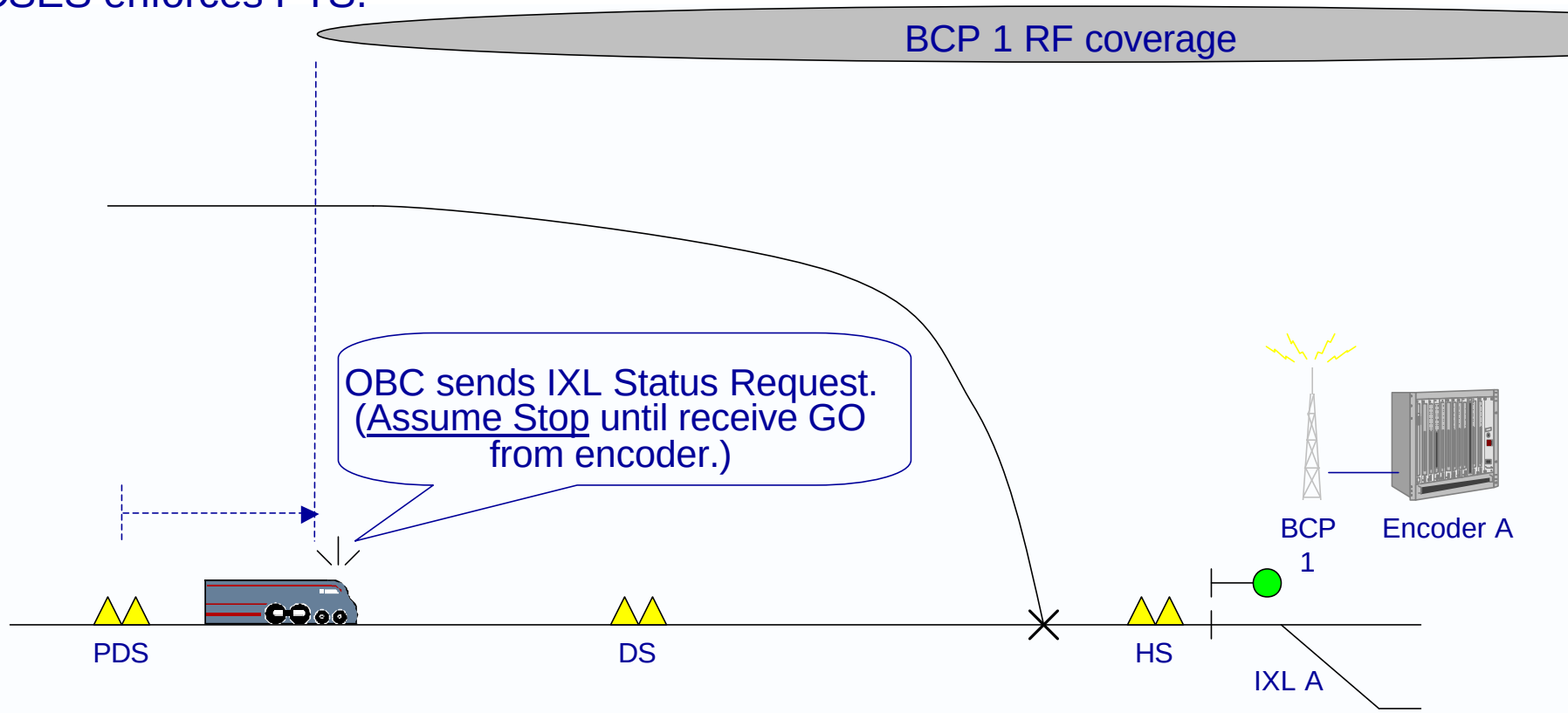

PTSO - Basic Operation example

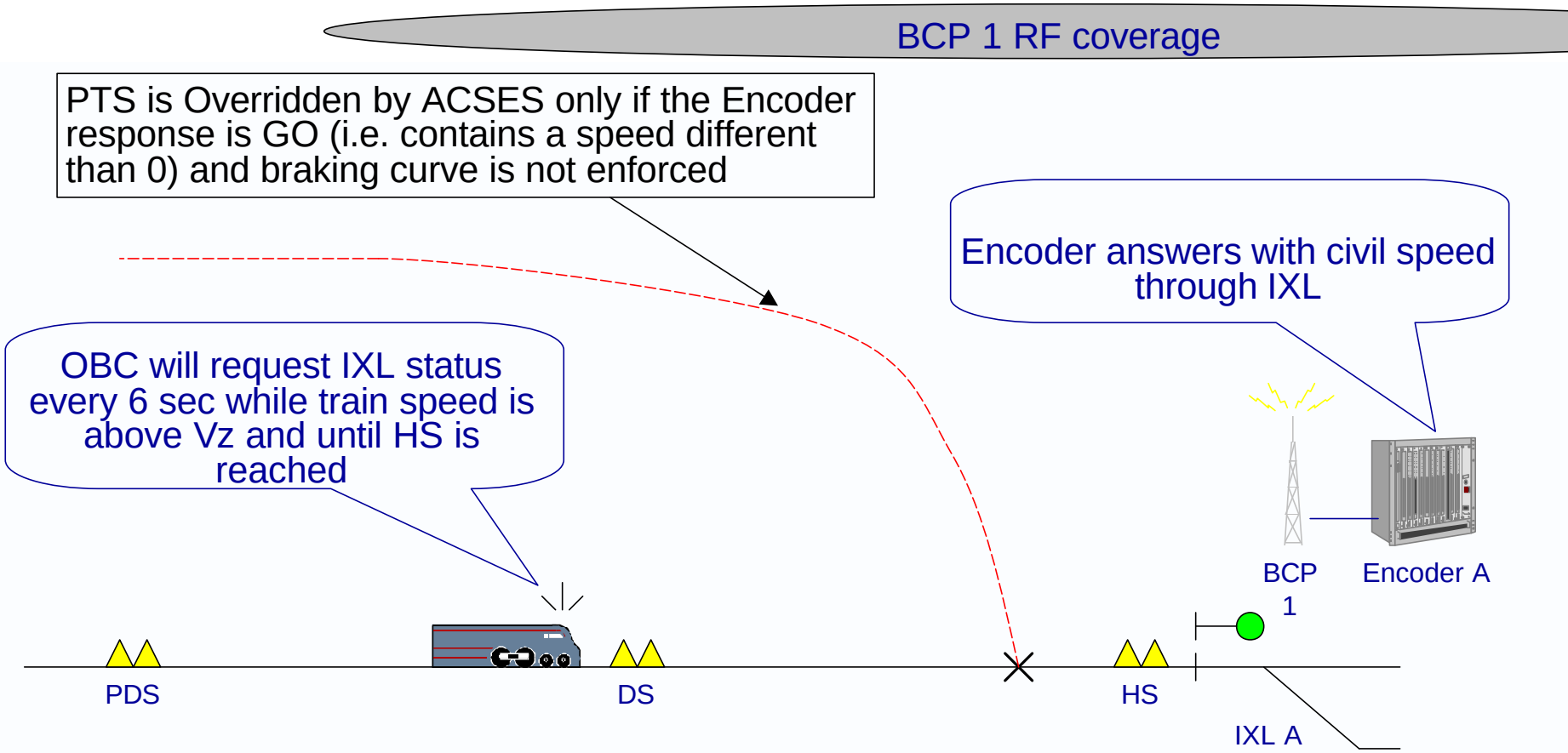

PTSO - Basic Operation example

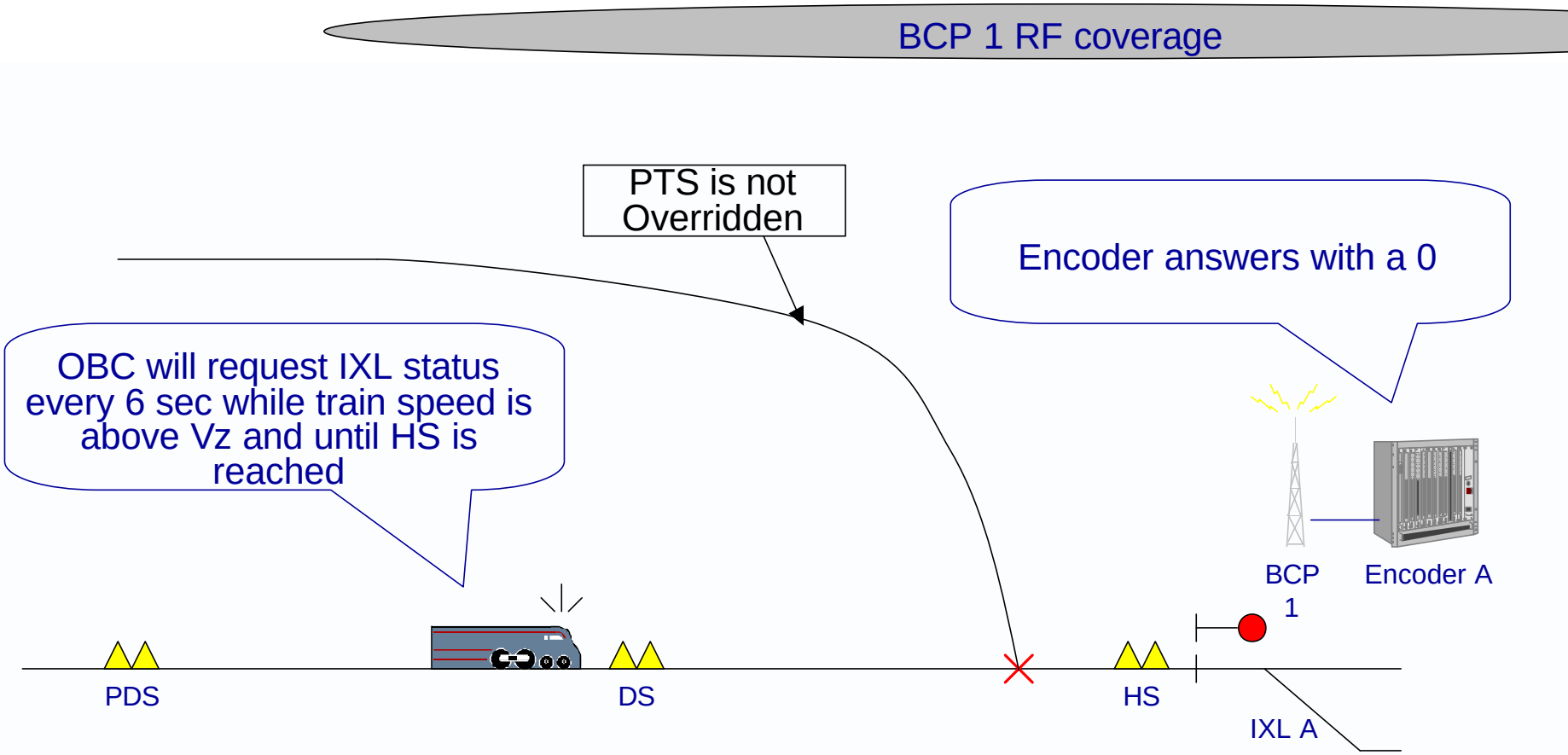

Equipment required for PTSO Operation

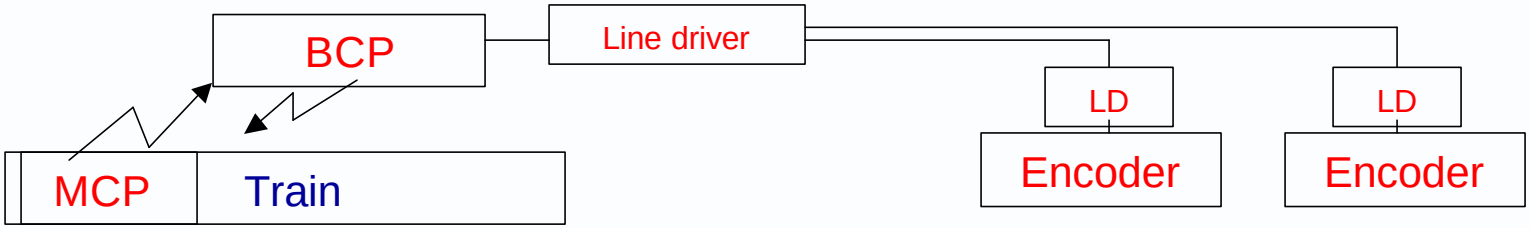

BCP

Duplexer

Radio Transmitter/ Receiver

Base Control module

Reference Oscillator

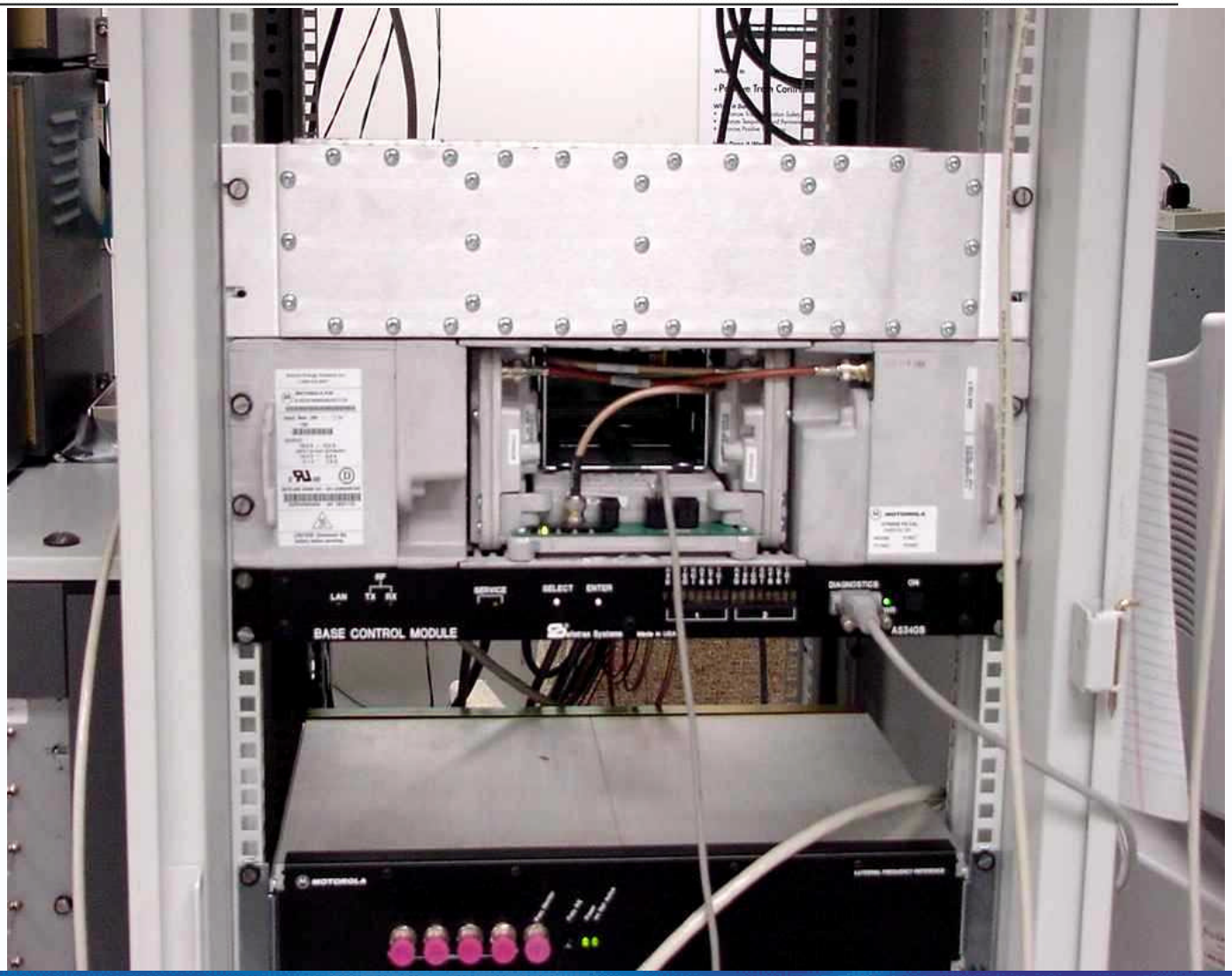

Encoders

Encoder Programming Plug

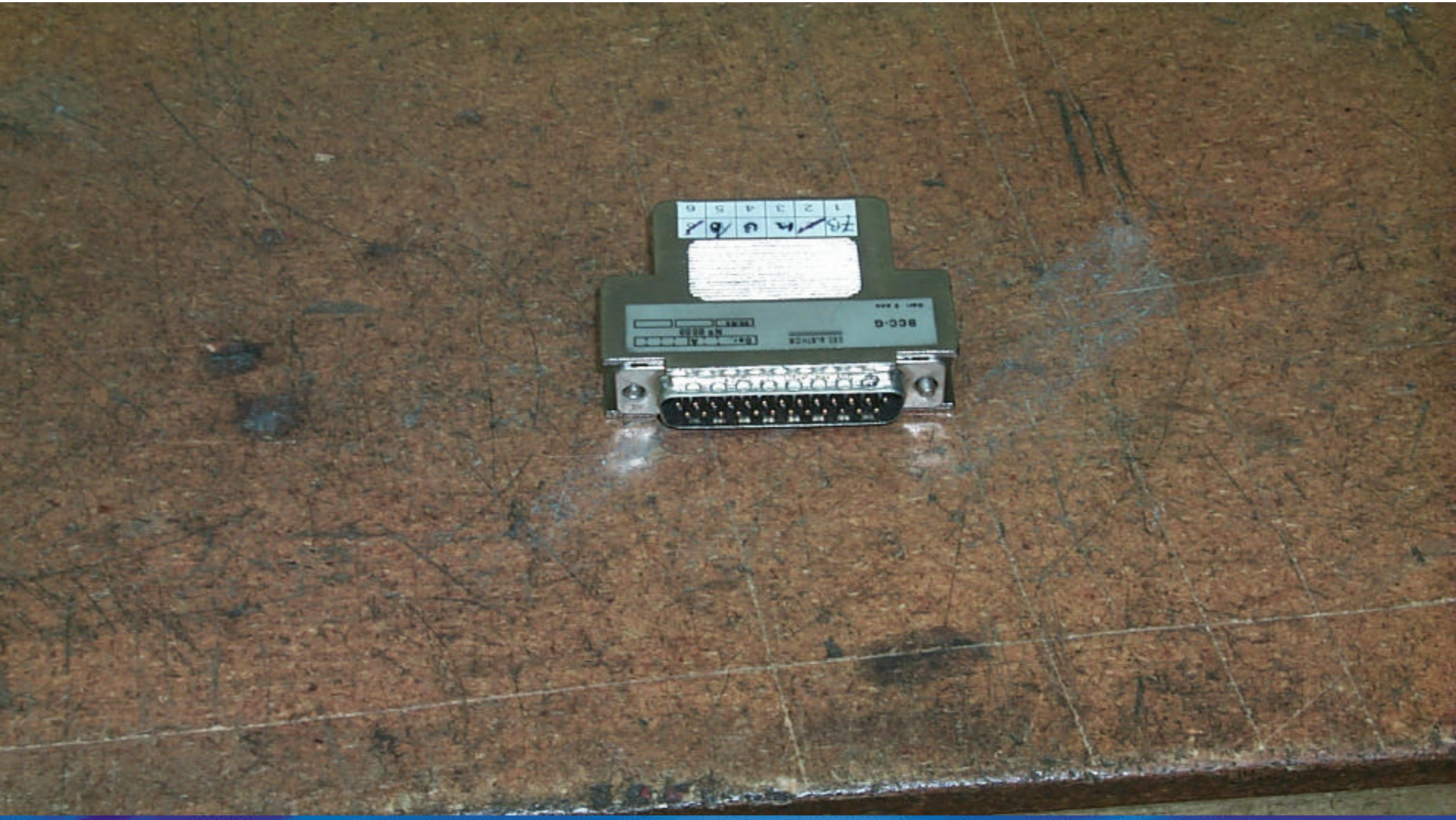

After PTSO

- Enforcement of Temporary Speed Restrictions without use of temporary transponders
  - CETC Operators add and delete TSRs
  - TSR Safety Server manages and delivers appropriate TSRs to trains
  - On Board system enforces TSRs in the same manner as PSRs
- Status
  - Hardware completed and tested
  - Software for wayside components started
  - OBC software modifications to be started at end of PTSO phase
  - Final test and commissioning planned for summer 2004

Amtrak

Equipment Required for TSR

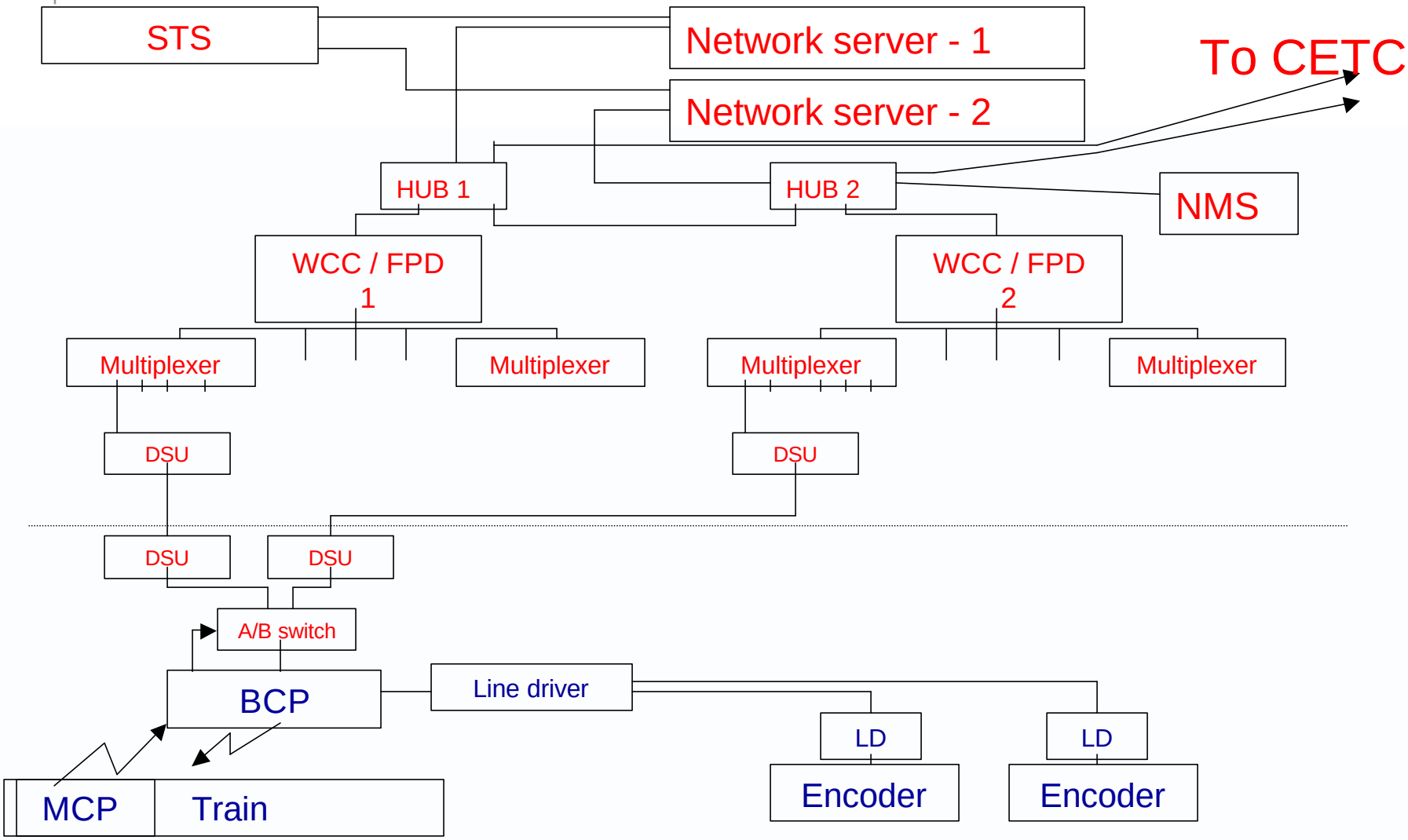

Redundant Network Server Equipment

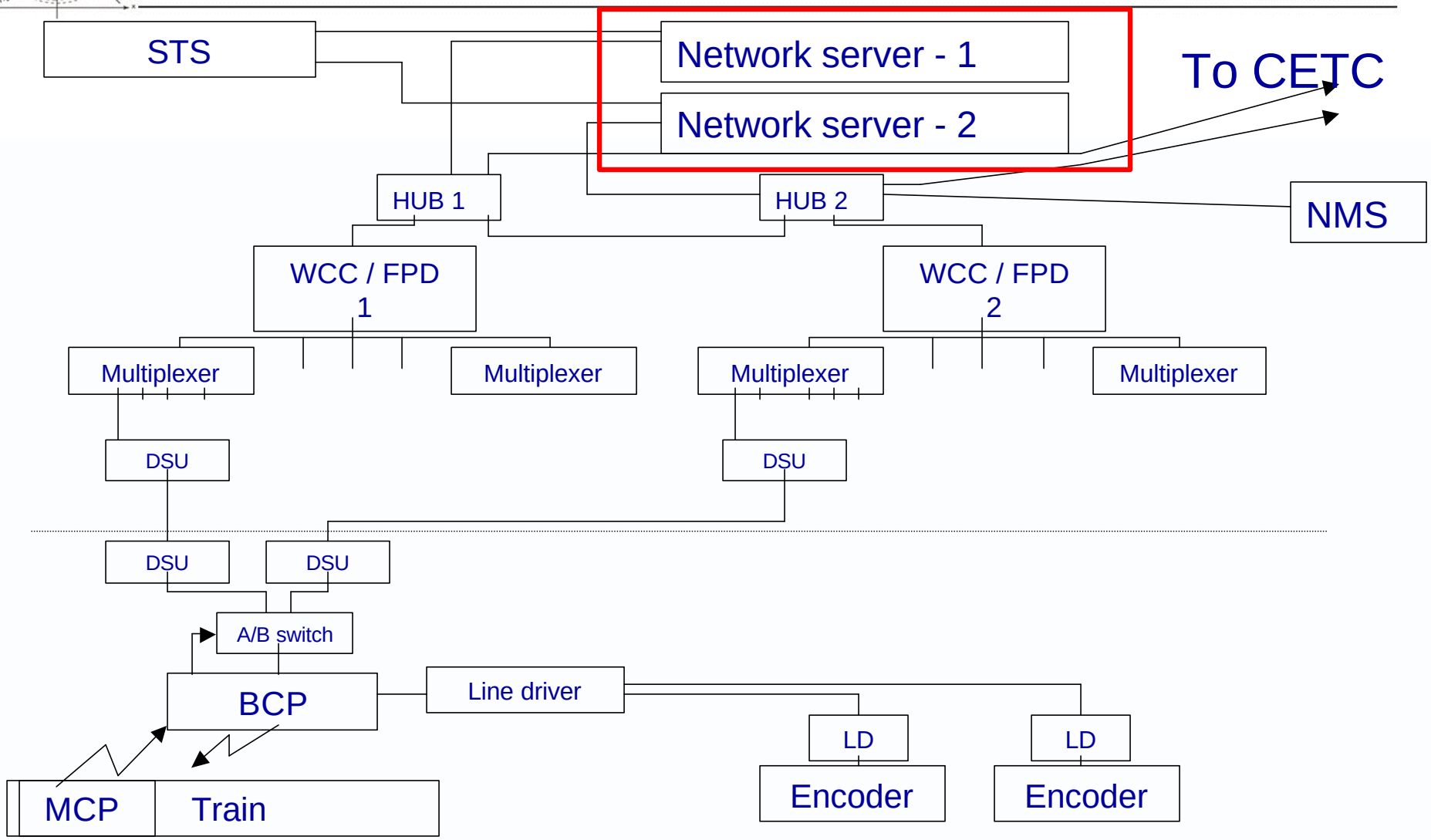

Equipment

ALSTOM

ACSES Network Servers

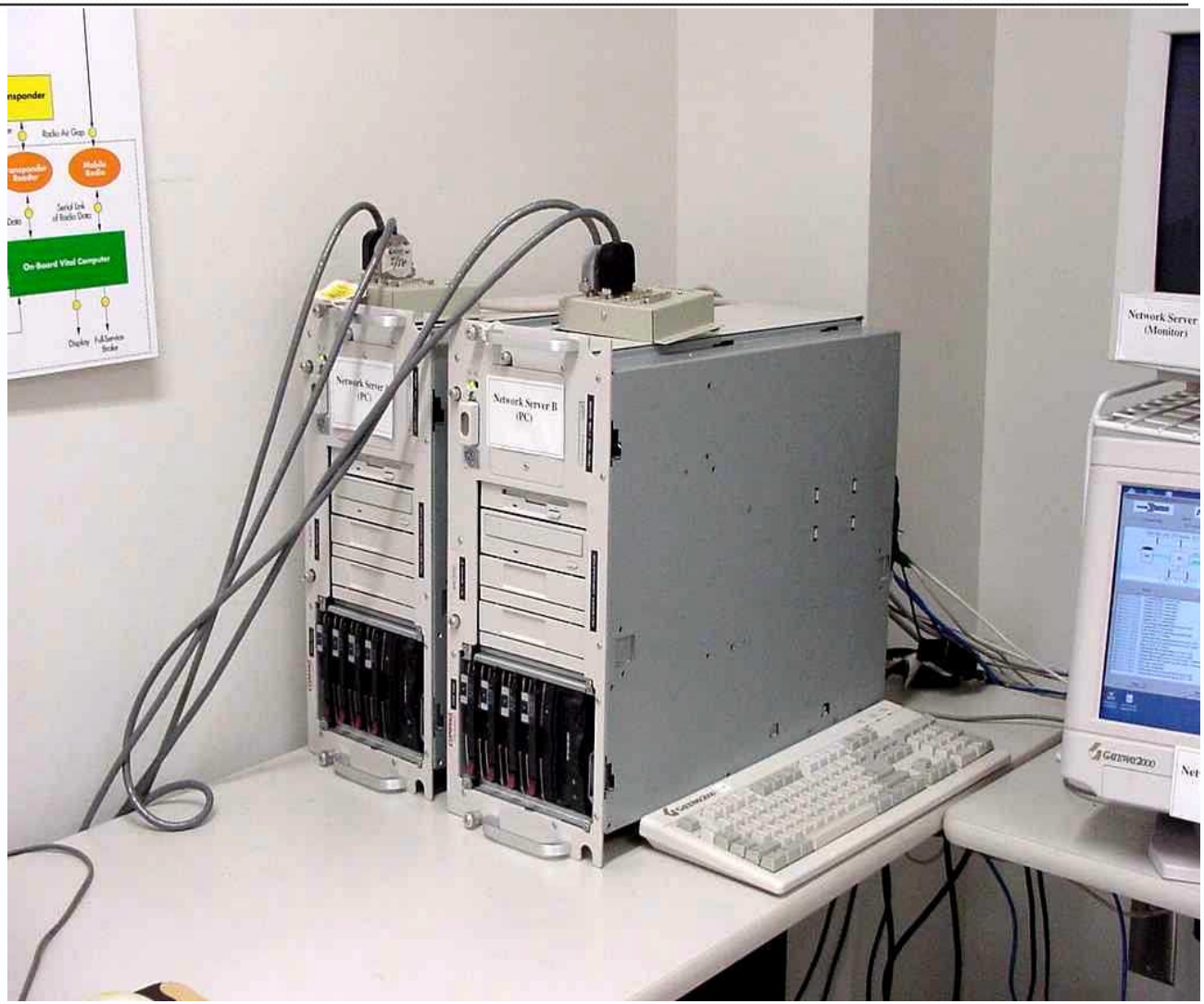

Safety TSR Server Equipment

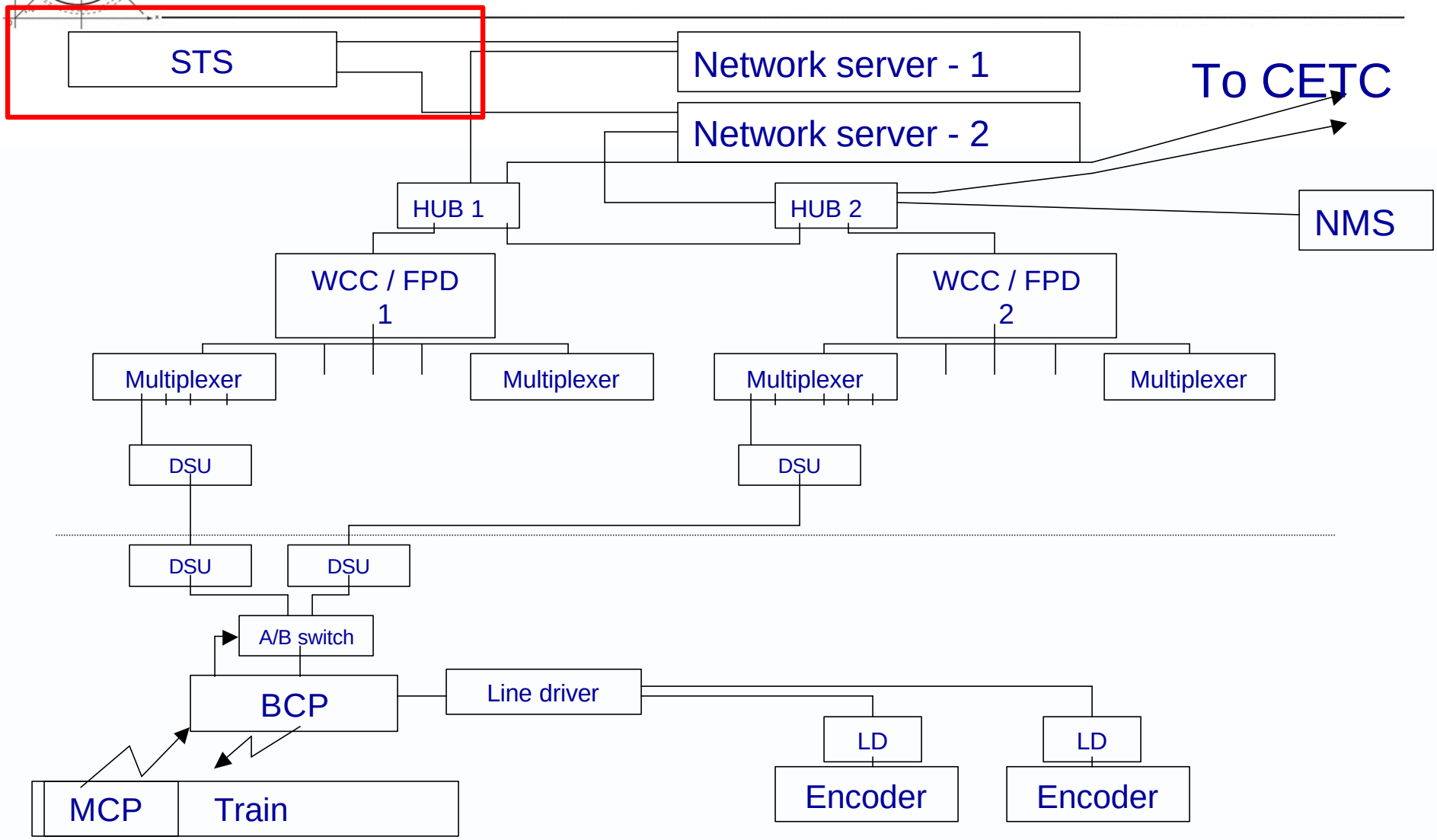

Equipment

ACSES TSR
Safety Server

Equipment

ALSTOM

ACSES TSR Safety Server

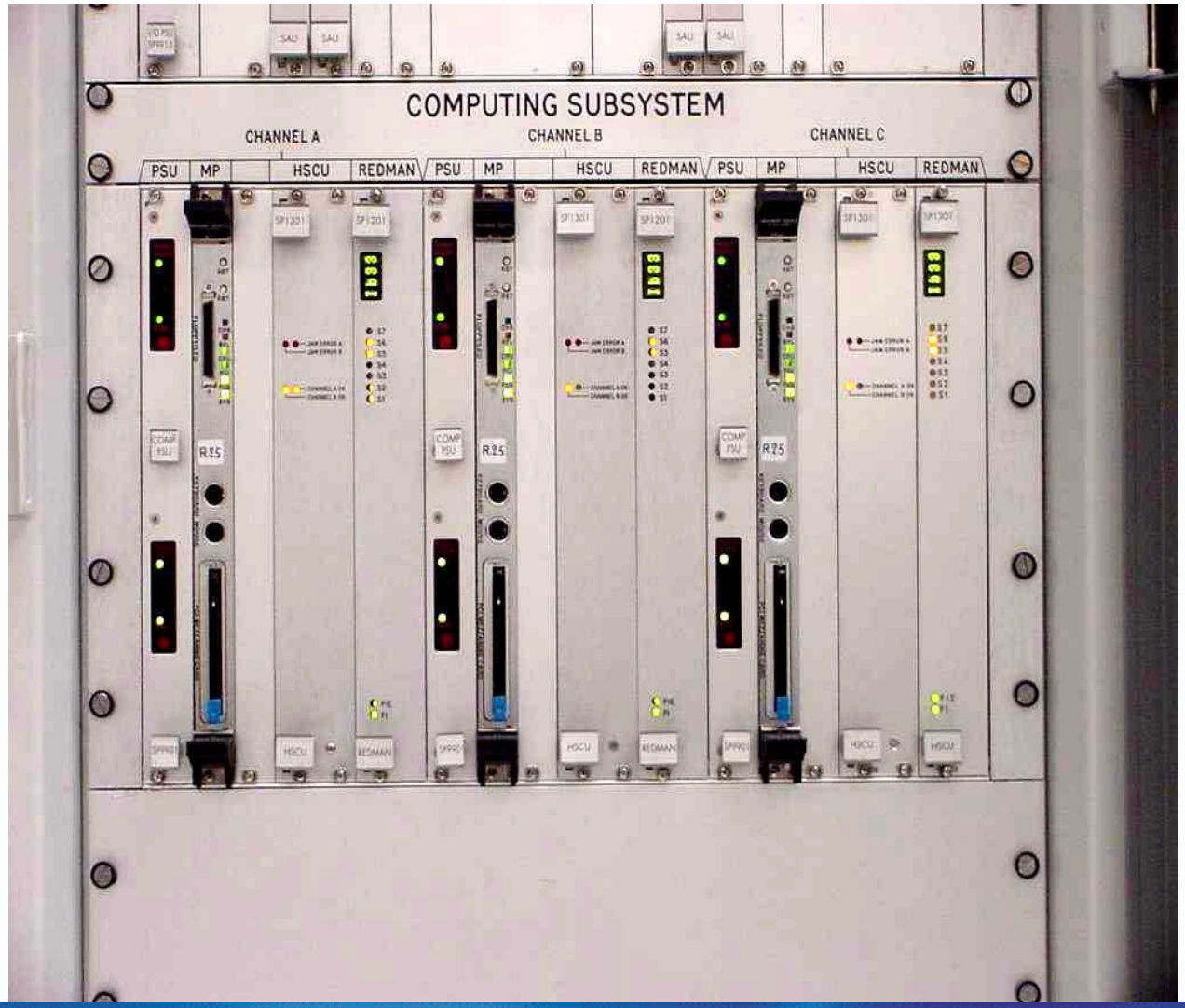

Communications Rack Equipment

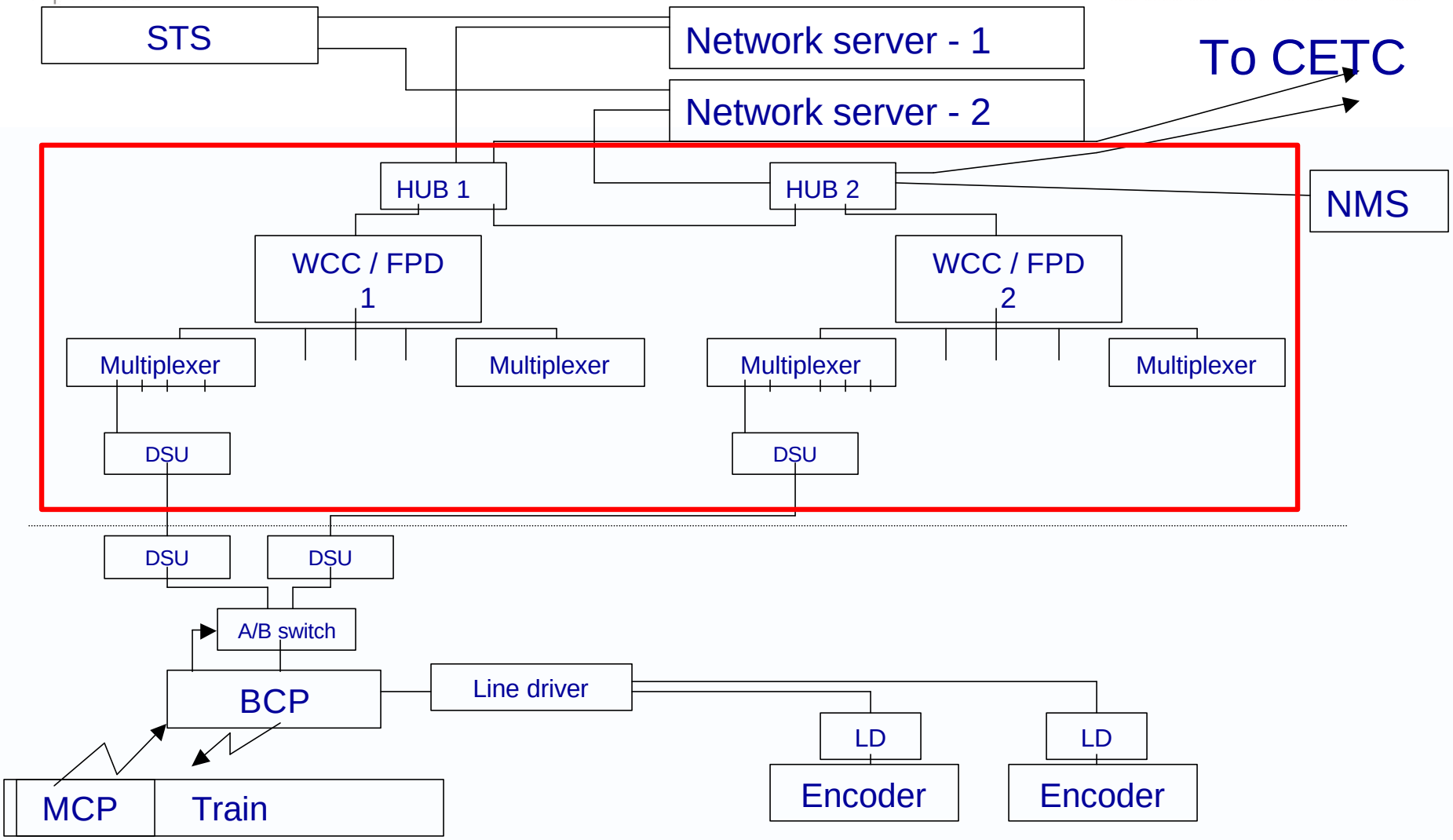

Equipment

Redundant Communications Racks

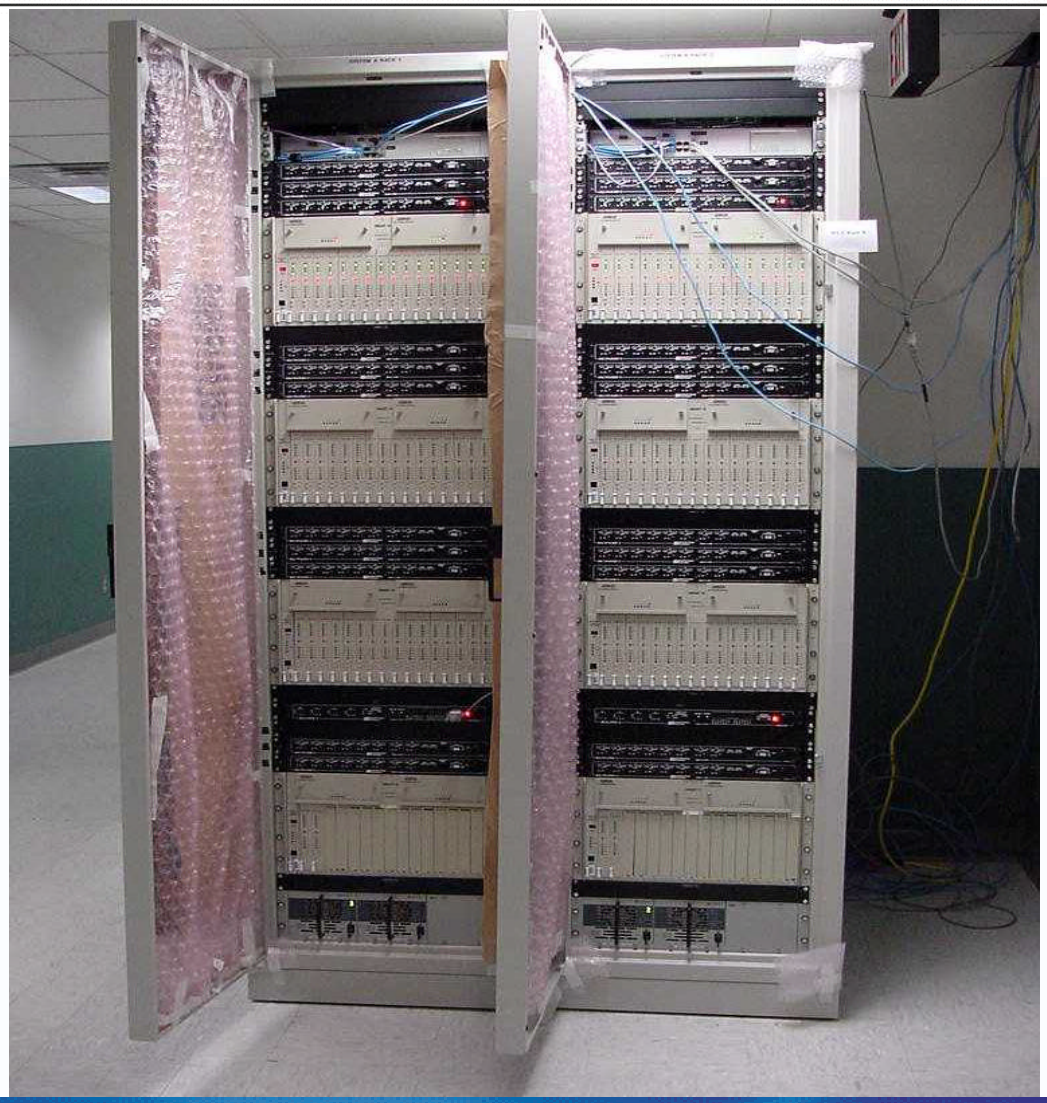

Equipment

Multiplexers & DSUs

Equipment

Multiplxer and WCC/FPD

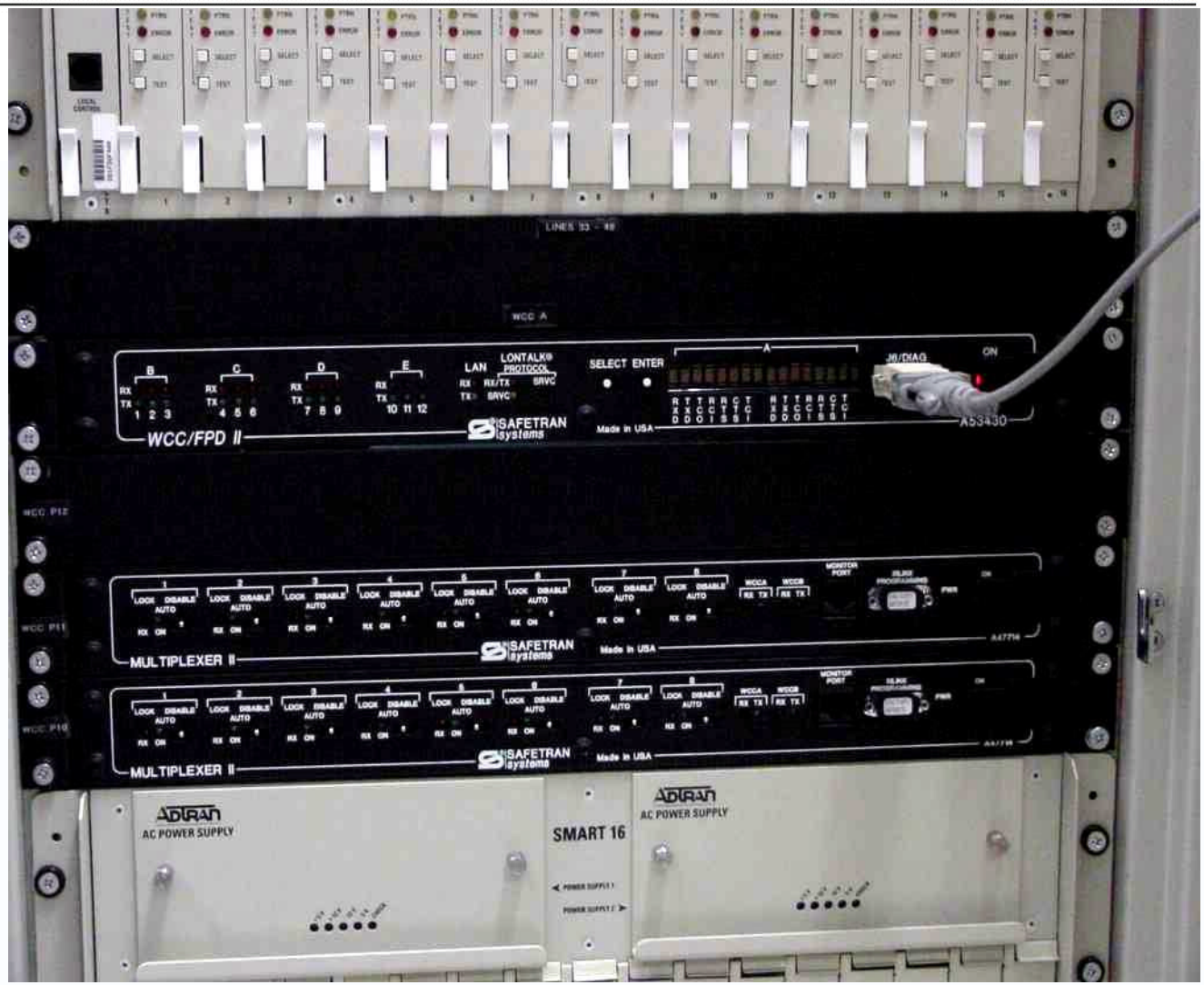

TSR Safety Server Equipment

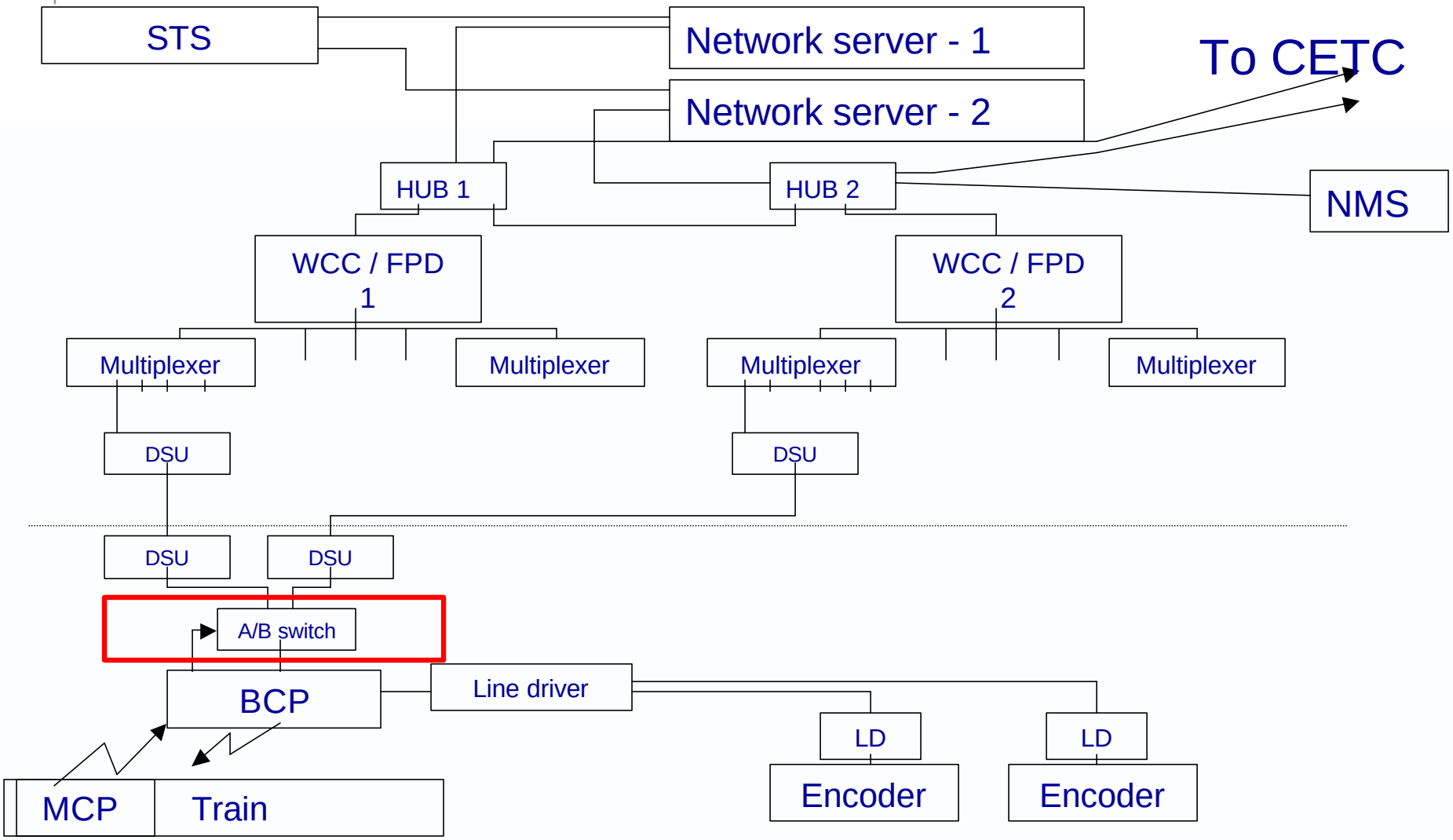

Equipment

A/B Switch

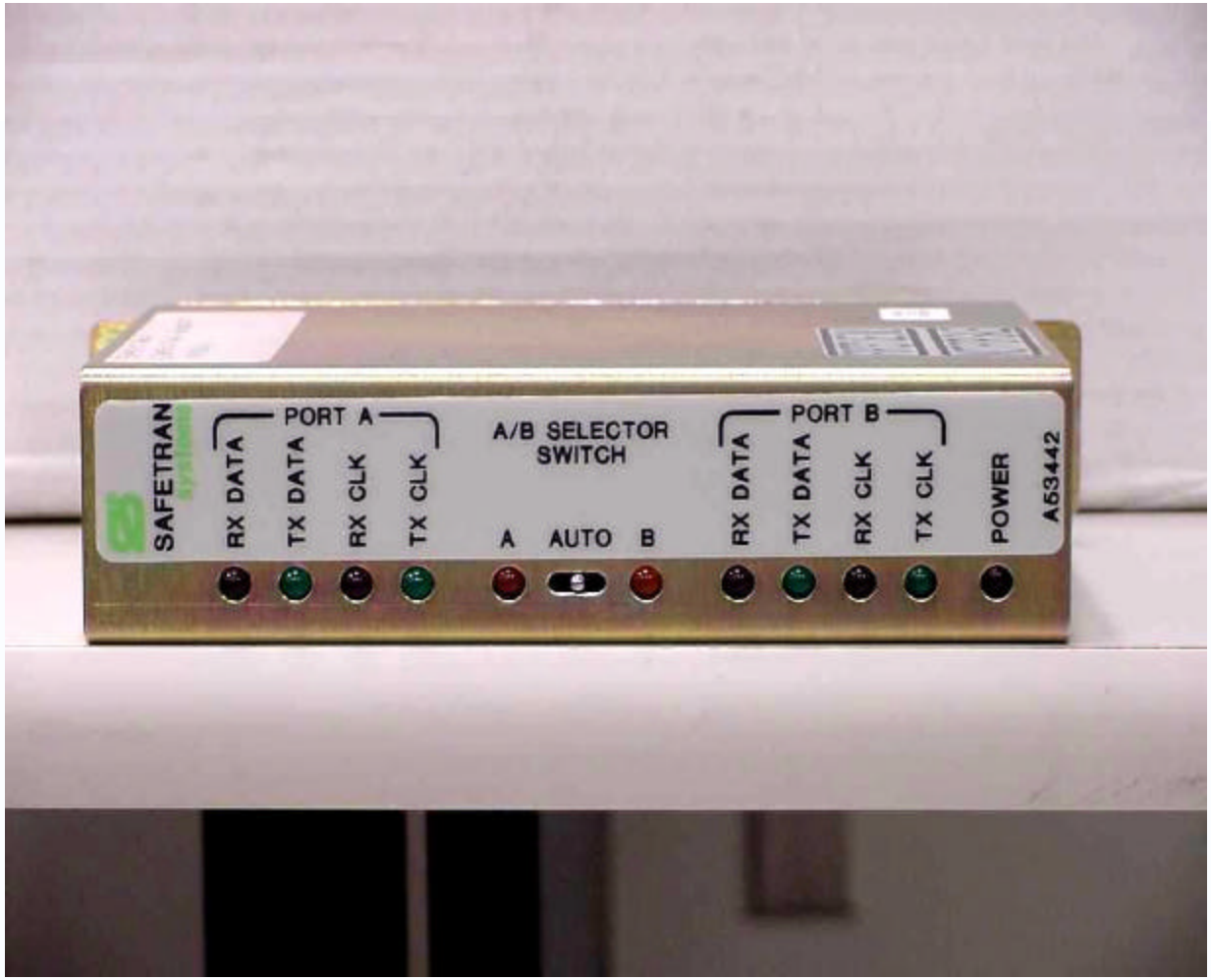

System Operation

OBC initiates all requests

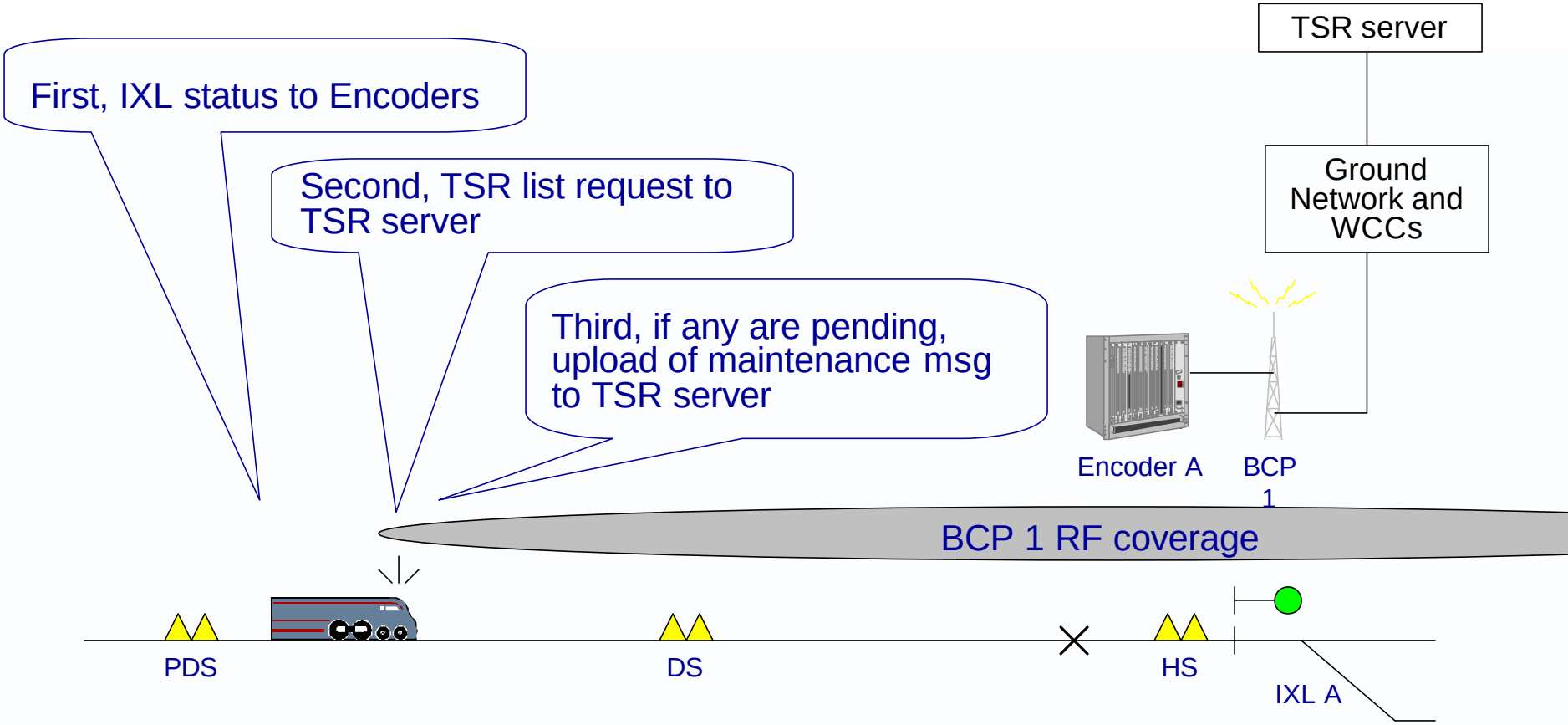

System Operation

OBC receives responses to its requests

TSR server answers with the list of TSR for this BCP and the next 2 BCP areas.

TSR server sends an acknowledge for the Maintenance message.

Encoder answers with IXL Civil speed, Exit track, and other information.

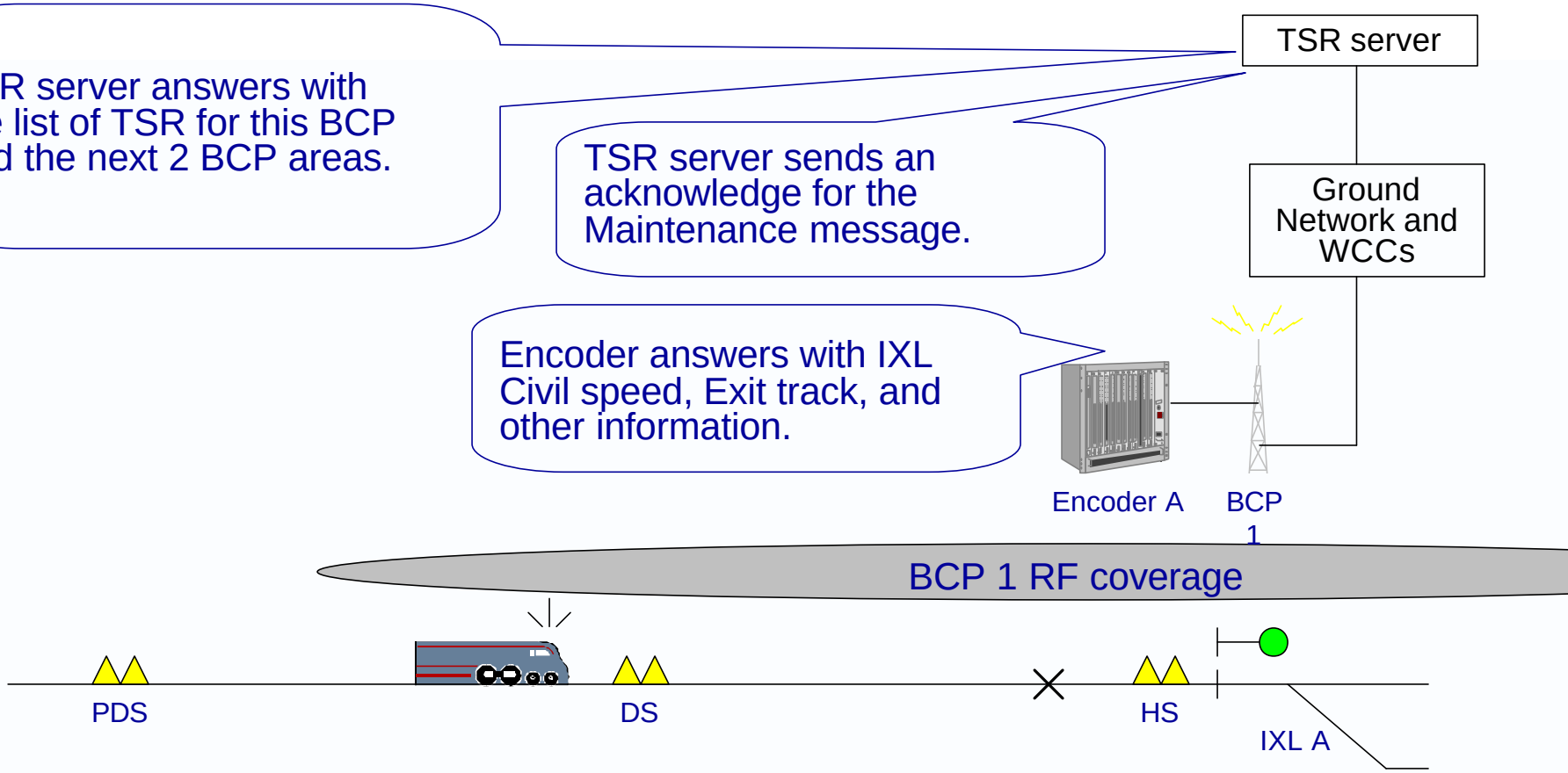

PTSO

Cab signal operates independently of ACSES. If cut in and operating it would receive a speed code for 30 MPH or lower depending on other traffic.

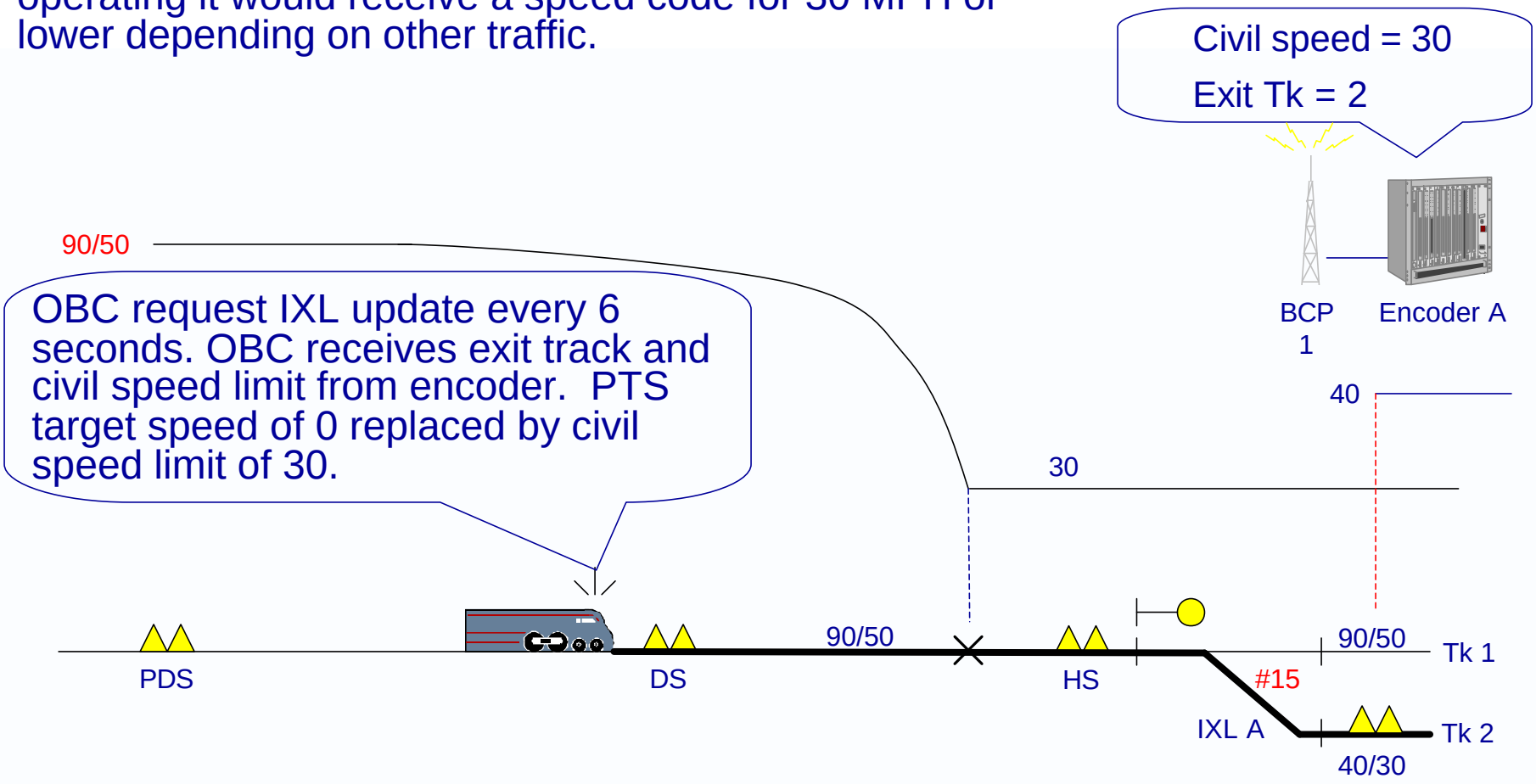

ACSES System Operation

- OBC loads the TSR list and identify the TSR on track 2 past IXL A.
- From the encoder response, OBC identifies the exit track and the need to enforce the TSR.
- OBC generates all braking curves
- OBC will enforce lowest of permanent civil speed, radio IXL route speed, and TSR.
- OBC continues polling HS every 6 sec.
- OBC continues requesting TSR list every 60 sec. (after 1 successful upload every 30 sec.)
- Cab signal system will enforce signal speeds independently. ACSES needed to enforce PTSO(joint) & TSR(independent)

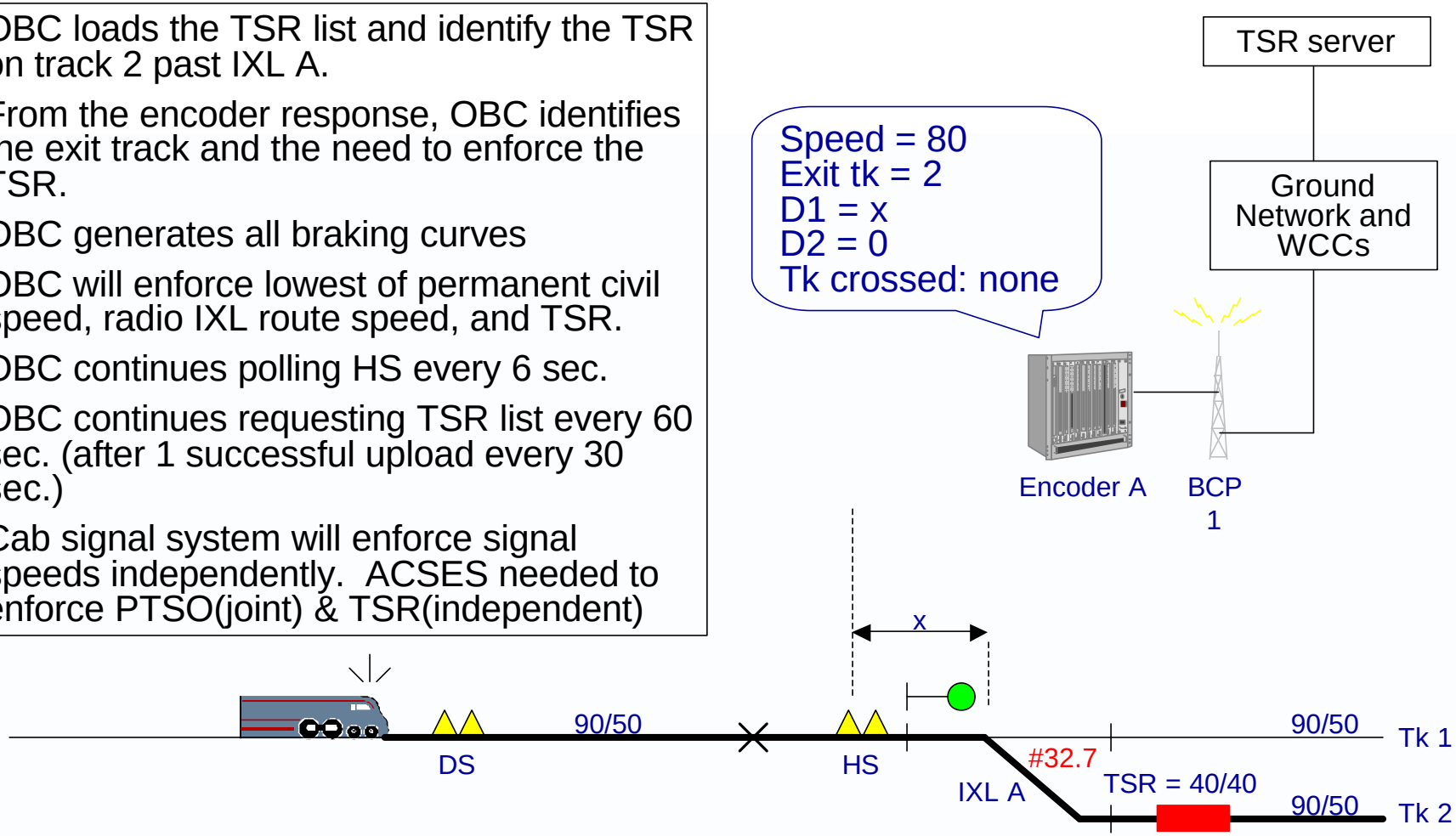

Amtrak